B SERIES

OPERATION AND MAINTENANCE MANUAL

BioMass B500, B1000

HeatMaster™
Tough on Winter, Easy on You

By HeatMaster Furnaces Inc.
Version 4

UL 2523-2009
CAN/CSA B366.1-2011

Contents

RETAIN THIS MANUAL FOR FUTURE REFERENCE

DO NOT THROW AWAY

CANADA
HeatMaster Furnaces Inc.
Box 158
Winkler MB. R6W 4A5
Canada
Ph. (204) 325-9792
Fax (204) 325-9803

USA
HeatMaster Furnaces Inc.
Box 373
Walhalla ND. 58282
Ph. (877) 325-9792
Fax (204) 325-325-9803

Info@heatmasterss.com
www.heatmasterss.com

Intertek

LIMITED WARRANTY

HeatMaster Furnaces Inc. warrants to the original owner of the Biomass furnace that it is free from defects in workmanship and material, which could cause a leak or malfunction of the firebox or water jacket, and against corrosion (if the instructions in the owners manual for water treatment and maintenance are followed) for the life of the furnace towards the purchase of a new HeatMaster[SS] furnace, in the following pro-rated schedule.

Warranty schedule: coverage in the initial 5 years is 100%

- Year 6 - 7 is 50%
- Year 8 - 9 is 40%
- Year 10 - 15 is 30%
- Year 16 to life is 10%

In addition, all steel and drive components including housing, legs, Augers, Burners, etc. have a pro-rated warranty for a period of 10 years with coverage reducing by 10% per year. Any parts not manufactured by HeatMaster Furnaces Inc., that are used on the furnace – such as thermostats, limit switches, pumps, heat exchangers, burners, augers, and motors – carry their own manufacturer's warranty. HeatMaster Furnaces Inc. will not be liable for the cost of shipping, replacement or repair of these parts.

If warranty requires removal or replacement of the furnace or a part on the furnace, HeatMaster Furnaces Inc. is not responsible for the cost of plumbing, replacement of antifreeze or water treatment, shipping cost or any other cost other than the replacement component or furnace.

HeatMaster Furnaces Inc. always has the right to decide if a part or furnace will be repaired or replaced and will not be liable for any cost not authorized by a HeatMaster Furnaces Inc. representative.

HeatMaster Furnaces Inc. does not warranty any damage caused by negligence and deterioration due to lack of proper ongoing maintenance, physical damage caused by abuse or freeze up power surges or unauthorized work, or modifications to the furnace.

HeatMaster Furnaces Inc. is not liable for any damage or cost which may occur from or during the operation of the furnace or damage incurred due to any heating system failure. The purchaser assumes all responsibility for the care, maintenance and safe operation of the furnace including adding of approved furnace treatment or water. HeatMaster Furnaces Inc does not warrant door gaskets, exterior paint or finish.

To qualify for warranty all instructions must be followed in operator's manual, water must be tested and maintained at a minimum of once per year, and warranty registration must be on file at HeatMaster Furnaces Inc. within 30 days of purchase along with a copy of the original invoice. No warranty can be approved unless the warranty registration and water test verifications are on file at HeatMaster Furnaces Inc.'s office.

The warranty can be violated by operating the furnace in a manner inconsistent with the owner's manual.

HeatMaster Furnaces Inc. reserves the right to change conditions of warranty at any time.

WATER TREATMENT AND TESTING

Water Treatment Policy

To qualify for warranty, water must be tested at a minimum of once per year and water treatment added when necessary.

To take a water sample:

- Locate your water sample bottle, mailing carton and mailing label provided to you by your dealer.
- Open the furnace drain located in the side pump cabinet of the furnace for 10-15 seconds or until the water runs clear. **CAUTION: Water is hot**! Use extreme care when pouring into a bucket, and let cool before collecting a sample.
- Fill one of the test bottles at least 1/2 to 2/3 full.
- Fill out the mailing label provided with the test bottle completely, including your email address, the model number and the serial number of your furnace. Make sure to note if the furnace water contains any antifreeze or additional chemicals.
- Attach top part of the label to sample bottle and bottom part to the outside of mailing tube. Place bottle in the tube.
- Mail to our testing lab. Results can take up to 4 weeks to receive and up to 8 weeks if no email address is on hand at HeatMaster^{SS}.
- You will receive a water test report outlining what must be done (if anything). If any action is necessary, take another sample and mail it to our test lab again to verify the recommended changes have been made.

Add the water treatment through the fill pipe located at the top of the furnace when initially filling the furnace with water or after testing, if needed. Ensure that all drains are closed. It is recommended that water treatment is added at a 1:200 ratio when initially firing the furnace and 1:300 after that. Additional treatment may have to be added for water with more severe properties or for systems with more chemically demanding requirements.

Recommended operating levels are as follows:

Conductivity: 100 - 4000 ppm

pH: 8.5 – 10. 5

Nitrates: no less than 730 ppm

Test Parameters and What They Mean

Conductivity

Conductivity is a measurement of minerals in your furnace water. While it is common to have minerals in water, in excess minerals can cause many problems in hydronic systems including scaling and corrosion.

pH

pH is a measurement of alkalinity (hard or soft water). For outdoor furnace water and the water treatment used in outdoor furnaces, it is better to have your water a little harder than softer (recommended pH range is 8.5-10) as the active ingredients in the water treatment neutralize harder water easier than softer water.

Nitrates

Nitrates tested for are a measurement of how much water treatment is in the water. Nitrates measured are active units of water treatment available to neutralize harmful elements in your furnace water. Nitrates also act to neutralize harmful bacteria that may build-up in the furnace water over time.

Glycol

Inhibited glycol provides anti-corrosion elements and freeze protection for outdoor furnaces and is compatible with Outdoor furnace Water Treatment. Because outdoor furnaces are open to the atmosphere systems and will have fresh water added occasionally, oxygen is always entering the system and will break down the glycol over time to create glycolic acid which will harm your furnace system. When this happens you will be required to drain and flush your furnace system.

It is always suggested to use 100% virgin glycol instead of recycled glycol as it will break down much sooner and create glycolic acid.

SAFETY PRECAUTIONS

Read and understand all precautions before operating the furnace.

This furnace needs a periodic inspection for proper operation. It is against federal regulations to operate this furnace in a manner inconsistent with operating instructions in this manual.

Save these instructions. Retain this manual as long as you own your furnace. Carefully read and follow these directions.

DANGER

Do not start the fire with or burn garbage, gasoline, naphtha, engine oil or other inappropriate materials. Only competent persons with a sound understanding of this heating method that are qualified and trained should operate this furnace. Improper firing could result in personal injury and/or damage to the unit and void warranty.

ATTENTION

- USE APPROVED FUELS ONLY!
- The person(s) operating this furnace must comply with all applicable local and state laws or other requirements.
- The person(s) operating this furnace is responsible to run it in such a way so that it does not cause a public or private nuisance. Consult with local authorities prior to installation to adhere to local laws and ordinances.
- DO NOT OVERFIRE THIS HEATER. Attempts to achieve heat output rates that exceed the heater design specifications can result in permanent damage to the heater.

WARNING

- All installations and operations of your furnace must follow state, provincial, and local laws pertaining to operations, wiring, plumbing and building codes.
- All models operate at atmospheric pressure. DO NOT obstruct, block or plug the overflow vent tube in any way, which is located on top of the furnace.
- When installing the furnace, the chimney should never be connected to a chimney flue serving another appliance.
- Do not operate furnace in event of power failure.
- Use caution when opening firebox and ash cleaning doors.
- Do NOT use chemicals or fluids to start the fire.

Risk of fire:

- Do not operate with fuel loading or ash removal doors open.
- Do not store fuel or other combustible material within marked installation clearances.
- Inspect and clean flues and chimney regularly.
- This appliance should not be installed in a location where a corrosive atmosphere, flammable gas or vapour, combustible dust or combustible fibers may be present. If flammables are present in the building, ensure ducts, vents and doorways between the rooms are sealed so as to not allow vapours or fibers to travel to the appliance.

CAUTION

- Do not start or operate furnace without checking the heating fluid. The furnace must be filled.
- Check for buried cables and utility lines before digging the trench to your furnace.
- For safety and proper temperature control keep all doors closed during operation.
- **Hot Surfaces:** Keep children away. Do not touch during operation.

ATTENTION: DO NOT CONNECT THIS UNIT TO A CHIMNEY FLUE SERVING ANOTHER APPLIANCE.

FURNACE INSTALLATION GUIDE

Installation should be performed by a qualified installer and must comply with all requirements of the agency having jurisdiction.

	B500	B1000
Max BTU Output	500,000 BTU/hr	1,000,000 BTU/hr
Furnace Size (W x H x L)	84 x 92.5 x 110	94 x 94 x 119
Furnace Weight	4,056 lbs	5,500 lbs
Firebox Dimensions (W x H x L)	24 x 48 x 32	32 x 48 x 40
Chimney Size	8″	10″
Water Capacity	312 gallons	597 gallons
Inlet / Outlet	2 pairs of 2" NPT	1 2" Pair and 1 3" Pair NPT
Power requirements	125/250V, 1Phase, 60Hz, 31 AMPS	125/250V, 1Phase, 60Hz, 31 AMPS

LOCATION

The location of the furnace will affect the heat lost to the surrounding area. Although the unit is well insulated, a furnace installed indoors will lose less heat than in an outdoor location.

- Ensure the minimum clearances to combustibles are maintained.
- Store the furnace fuel in a clean, dry location.
- Do not place or store furnace fuel within the installation clearances or within the space required for servicing the unit.
- Indoor installations will require adequate fresh air supply into the room housing the furnace. If other fans are drawing air from the same space ensure there is sufficient supply air to prevent a negative pressure.
- Contact all governing authorities in your area prior to installation.
- When choosing the location for your furnace; you should consider prevailing wind direction, as well as distance from buildings and fuel storage.
- Give consideration for any effect on your neighbors.

CLEARANCES TO COMBUSTIBLES

Whether installing your furnace inside a building or outside, the following clearances to combustibles must always be followed. Damage and personal injury may result.

ATTENTION: DO NOT CONNECT THIS UNIT TO A CHIMNEY FLUE SERVING ANOTHER APPLIANCE.

DO NOT STORE COMBUSTIBLE FUELS IN THE SAME SPACE AS THE FURNACE IF INSTALLED INDOORS.

Minimum Clearance to Combustibles

Furnace Roof to Ceiling (Indoor Installations)	24″
Side Walls & Rear	6″
Front (Loading door)	24″

Service Clearances

Front (Firebox Door)	48″
Sides	48″
Roof	48″
Ash Auger (from the motor end)	30″

FURNACE FOUNDATION

- Footprint dimensions and load specifications are shown in the illustration at the bottom.
- Consult with local professionals to ensure the foundation design is adequate to support the given loads with your soil conditions.
- Extending the concrete to include the service areas around the furnace is recommended.
- A cement pad of 4-6″ in thickness should be used.
- The furnace should never be installed on a combustible floor.
- Never allow combustible material to accumulate on the furnace foundation.

B500
(15′ Bin)

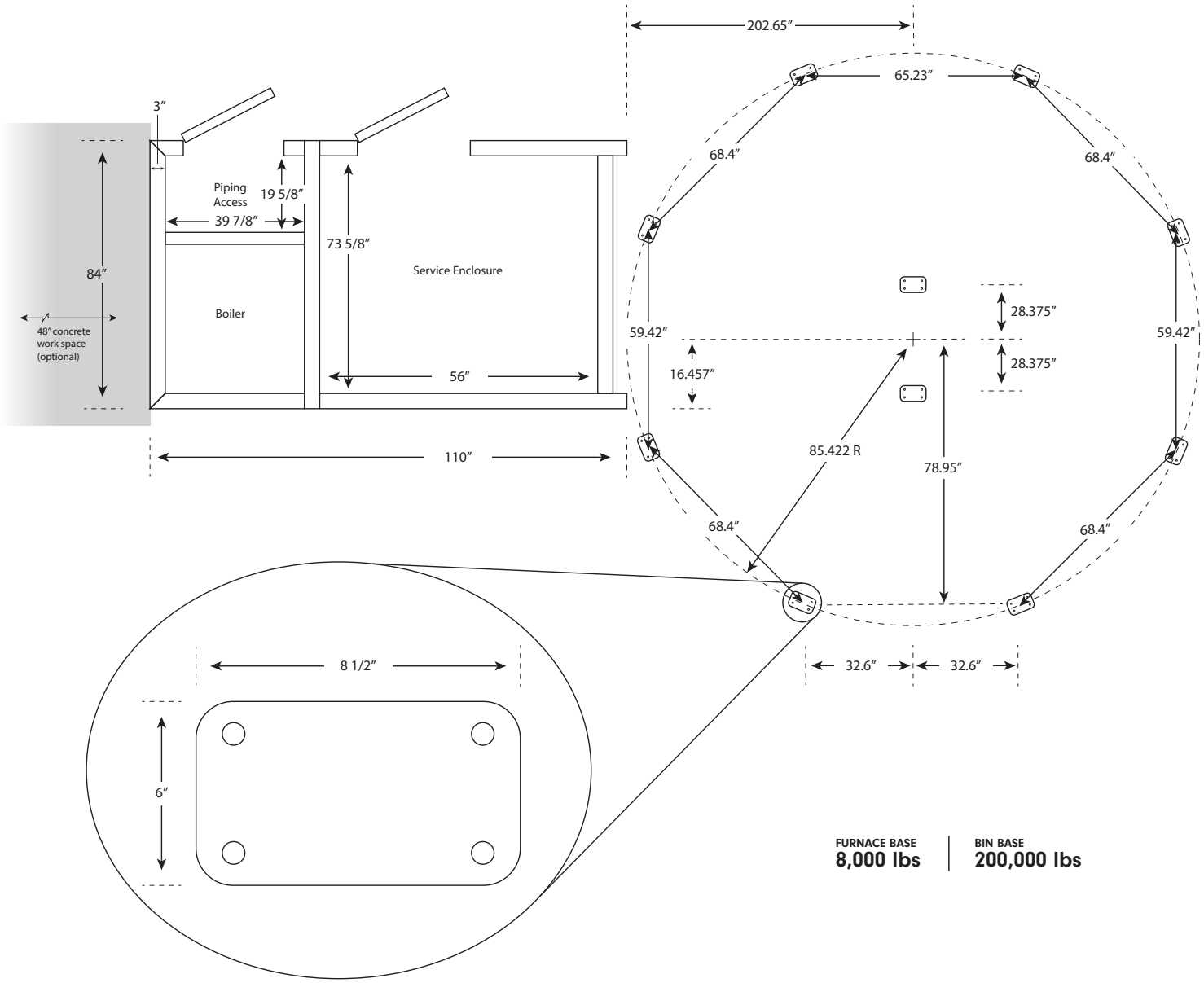

FURNACE BASE	BIN BASE
8,000 lbs	**200,000 lbs**

B1000
(15′ Bin)

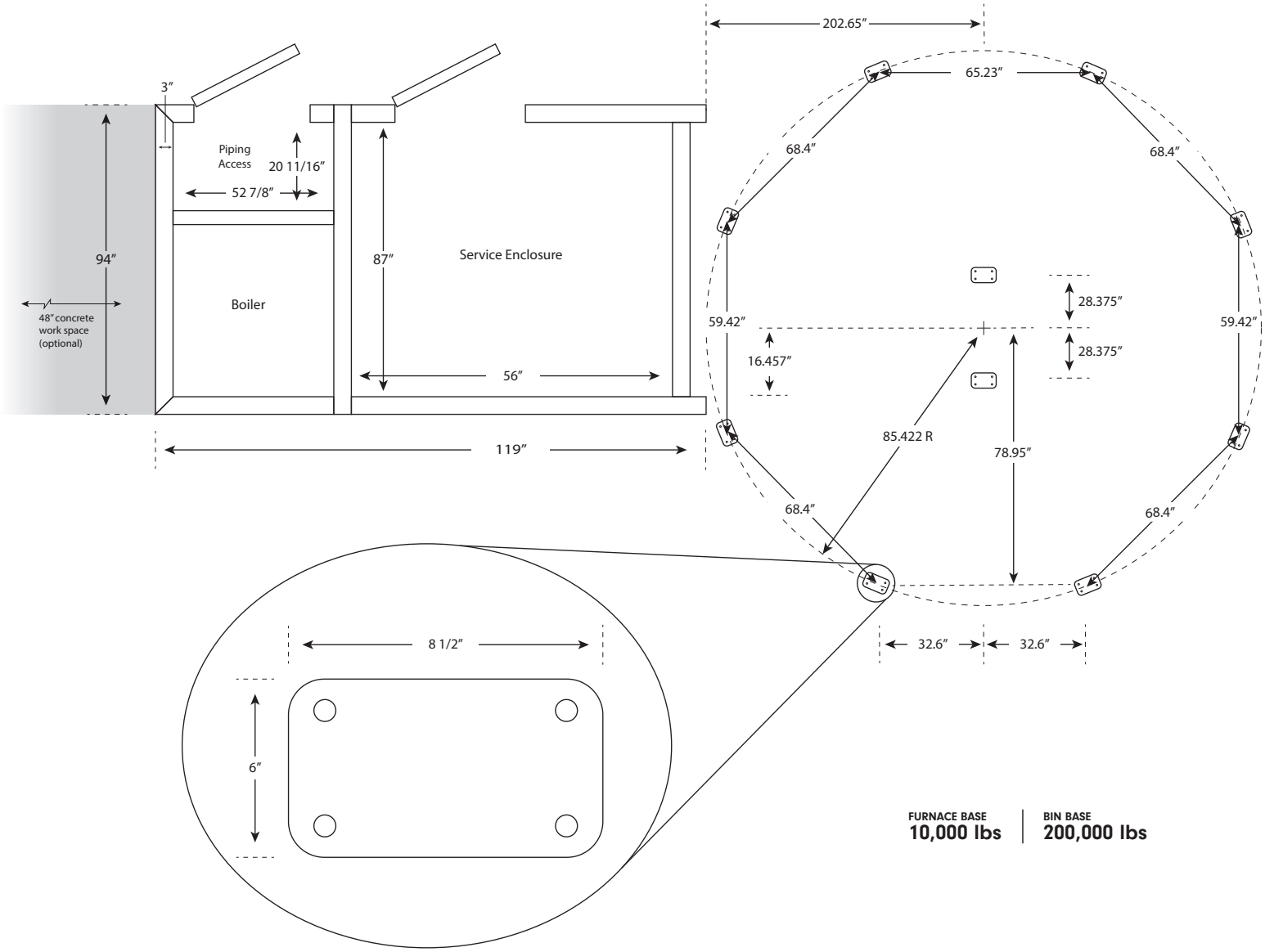

FURNACE BASE
10,000 lbs

BIN BASE
200,000 lbs

TRENCH

HeatMaster Furnaces Inc recommends the trench to be 24" to 36" deep and wide enough to install your water lines. If possible, have a gradual slope in your trench to allow drainage away from your lines and out of the trench bottom.

Most insulated underground pipes have room for electrical wire in it. If it does not, place the electrical supply in the bottom of the trench and cover with 6 inches of dirt before installing the heating lines.

NOTE: We recommend a deeper burial when installing piping below an area with regular vehicle traffic. This will help to reduce the compression force on the lines.

INDOOR INSTALLATION

IMPORTANT: A fire may be caused by the following:

- Improper installation. To reduce the risk of fire, follow all local codes and these installation instructions carefully.
- Storing flammables in the same room as the furnace or wood fuel.
- Improper ash handling.
- This appliance should not be installed in a location where a corrosive atmosphere, flammable gas or vapour, combustible dust or combustible fibers may be present. If flammables are present in the building, ensure ducts, vents and doorways between the rooms are sealed so as to not allow vapours or fibers to travel to the appliance.
- **ATTENTION:** When installing the furnace in a building, always make sure that smoke and CO detectors are properly installed in the same area as the furnace.
- Outside combustion air requirements will apply. Refer to the "Combustion Air Requirements" section in this manual.

Outside combustion air may be necessary if:

- The solid-fuel fired appliance does not draw steadily, smell, experiences smoke roll-out, burns poorly, or back-drafts whether or not there is combustion present.
- Any of the above symptoms are alleviated by opening a window slightly on a calm day.
- The house is equipped with a well-sealed vapor barrier and tight-fitting windows and/or has any powered devices that exhaust house air.
- There is excessive condensation on windows in the winter.
- A ventilation system is installed in the house.

Chimney

Note: Incorrect chimney installation will void the warranty.

The chimney on your B Series outdoor furnace is a stainless steel double wall insulated chimney. When installing the furnace, the chimney should never be connected to a chimney flue serving another appliance. Make sure chimney, flue pipe and draft inducer fan stay clean and in good condition at all times.

The top of the chimney must extend at least 3.0 feet above the highest point where it exits the roof and be at least 2.0 feet taller than any point of the roof within 10.0 feet. For a new chimney, use an insulated stainless steel system that conforms to type HT (High Temperature) requirements of UL 103 and ULC-S629 and complies with the requirements of Chapter 11 of NFPA 211, Standard for Chimneys, Fireplaces, Vents and Solid Fuel Burning Appliances in the USA or CSA B365 Installation Code for Solid Fuel Burning Appliances and Equipment in Canada.

This is a forced air furnace but it is important that the chimney has a good draft to further eliminate any smoke issues.

Note: Using a smaller chimney may cause smoke issues and using larger chimney may negatively affect furnace performance.

ATTENTION: CLEANING OF THE HEAT EXCHANGER, FLUE PIPE, CHIMNEY AND DRAFT INDUCER IS ESPECIALLY IMPORTANT AT THE END OF THE HEATING SEASON TO MINIMIZE CORROSION DURING THE SUMMER MONTHS CAUSED BY ACCUMULATED ASH.

Chimney Installation

ATTENTION: Before installing, check with local building codes for information regarding chimney height and distances to adjacent buildings, etc. You may need to obtain a building permit for the installation of this appliance or the chimney.

Make sure to follow these simple rules to ensure proper performance and safety.

- We recommend that chimney installed on our products be installed by professionals who are certified in the USA by NFI (National Fireplace Institute) or in Canada by WETT (Wood Energy Technology Transfer).
- Draft problems may occur because of incorrect chimney installation.
- The chimney must be connected using a minimum double wall stainless steel chimney and connector.
- Use only components intended for the brand and model of chimney you are using. Never substitute parts from other chimney brands or fabricate your own components.
- To be safe and effective, the chimney must be installed exactly in accordance with the manufacturer's instructions.
- Use a direct exit whenever possible. A vertical exit with no elbows is always the safest and most trouble-free installation.
- Maximum chimney installation height is 15 ft.
- Maximum horizontal installation from the furnace to the exhaust exit is 3 ft.
- Maximum 8 ft. run from elbow to elbow but keep as short as possible.
- Never use an elbow with a greater than 30 degree bend. 45 degree elbows and tees cannot be used.
- Elbows should never be installed in floor joists or roof and attic entries.
- Shields should be used whenever going through floors, attics, and roofs to keep the wood and insulation from getting too hot and possibly catching fire.
- Make sure to follow local building codes.

Roof Penetrations and Clearances

The basic rule is this: the top of the chimney must clear the roof penetration point (the upper edge) by at least 3 feet and must clear anything within a 10 foot radius by at least 2 feet. This includes the peak of the house, parapet, dormer, chimney, or spire. See diagram below.

If the chimney terminates beyond 10 feet from the ridge of the roof it must clear the upper penetration of the roof by 3 feet. Notice that the flue still terminates 2 feet above the roof at the 10 foot perimeter:

ATTENTION: DO NOT CONNECT THIS UNIT TO A CHIMNEY FLUE SERVING ANOTHER APPLIANCE

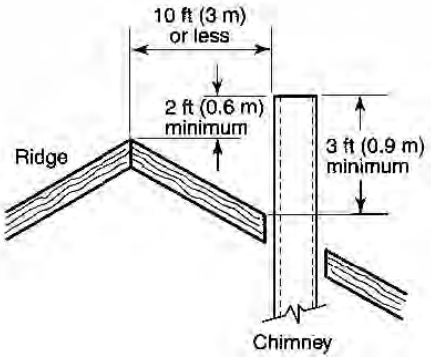

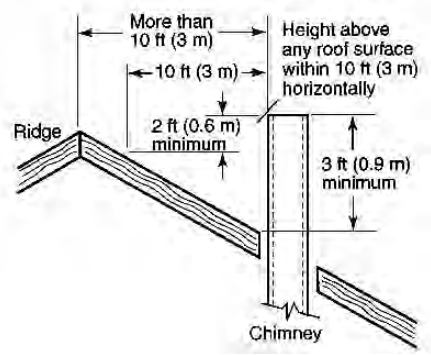

Combustion Air

Furnaces, exhaust fans, and other appliances all draw air from the room in which they are located. Your Biomass furnace adds to that draw, making it important to ensure there is an adequate source of fresh air to offset these demands. If this is not provided a negative pressure may be created in the room and starve combustion in the furnace. The room housing the B500, B1000 must have an opening to the outside providing a minimum of 332 square inches of net free air into the room for the B500 Series, and 498 square inches for the B1000.

IMPORTANT: The furnace room must never be in a negative pressure condition. Negative pressure could result in smoke in the room.

WIRING AND HYDRONIC LINES

- All wiring must conform to local codes.
- Use an electrical wire rated and approved for underground installations. This wiring can be placed in the same trench below the water lines. A qualified technician must perform the electrical portion of the installation.

Underground Hydronic Lines

Hydronic lines (hot water heating lines) whenever buried or encased in cement should not be spliced. Take the necessary steps to ensure they stay dry. This ensures that minimal heat loss occurs. Supply and return lines should always be sized according to the flow rates required by the building heat load.

A minimum of R8 insulation value is recommended. Using pre-insulated piping with a waterproof jacket is strongly encouraged. Any insulated piping must be encased in a waterproof jacket to prevent damage to the insulation and saturation from ground water.

Hint: Mark your feed and return lines prior to covering and allow enough pipe above ground at both ends for a relaxed connection.

Furnace Connection

- Connections to the furnace are clearly marked.
- Return (from the building) are the top ports.
- Supply (to the building) are the bottom ports.
- The installation of isolation valves at both ends of the pump is recommended as well as a valve at the return line. This will allow you to shut off water supply if repairs or additional heating components are added to the system.
- Your main power is connected to the junction box on the side of the control panel and should be connected by a qualified technician.

Building Connections

A hole large enough to accommodate the water lines and proper insulation through the wall is important. Be sure to properly seal this penetration from both sides of the wall to avoid damage from water and condensation.

System Flow Rates

Your B500, B1000 Biomass furnace is factory equipped with a circulating pump to maintain proper flow through the furnace at all times. This pump should be plugged into the power outlets near the pump only after the furnace has been filled with water. Never operate circulating pumps when the furnace is low on water. This pump is not designed to provide any flow to the supply/return piping to the buildings. Circulating pump(s) need to be properly sized and installed on the outlets provided in the pump cabinet on the furnace. The size of the pump(s) will depend on the heat load requirements and the pressure drop through the system piping and components. These selections should be made by a hydronic professional.

Interior Connections

You may require either a water-to-water (tube and shell or plate) or a water-to-air exchanger (rad) to transfer heat energy from the hot water your furnace has produced. Your plumber or dealer can design and install a system to best fit your needs. The following are examples of basic interior connections. Your dealer carries the necessary parts for installation.

It is important to note that when installing a piping system in your building that you should avoid installation methods that cause too great a restriction in the piping system. Examples of this are reducing pipe size, an excessive amount of joints and elbows, etc.

Whenever possible we recommend installing the pumps supplying the buildings in the cabinet on the Biomass furnace. This will aid in priming the pumps and minimize the potential for cavitation. Strategically placed air bleeders in the system can simplify air removal on initial startup. This can also allow a point for feeding water into the system for the initial fill and topping up when necessary. Air locks restrict system flow which leads to poor performance of any type of heat exchanger.

DISCLAIMER: The following information in the interior connections are examples and suggestions only. Your Biomass heating system should always be designed and installed by a hydronic heating professional.

Water-To-Water Heat Exchangers For Pressurized Furnace Systems

A water-to-water heat exchanger may be used to maintain pressure in an existing Boiler system. The water-to-water exchanger is installed in-line on the return side of the existing pressurized Boiler system. This allows the non-pressurized outdoor Boiler to heat the pressurized indoor Boiler.

The pressurized Boiler system can be used as a backup heat source in case of emergency or need for additional heat.

When connecting the Boiler to an existing pressurized Boiler system:

- The heat exchanger must not be installed so that it interferes with normal heat delivery of the existing Boiler system.
- The heat exchanger must be installed without affecting the operation of the electrical and mechanical safety controls of the original Boiler.
- The heat exchanger must provide for a changeover from one fuel to the other without requiring manual adjustment of any controls or components other than the thermostats.
- The heat exchanger must have provisions for preventing, or adequate water capacity within the Boiler to prevent damage from loss of circulation due to electrical power failure.
- The heat exchanger must be installed without changing the function of the controls or rewiring of the original Boiler. A wiring interconnection is permitted. The electrical system of both Boilers shall be powered from a single branch circuit without exception.

Furnace Safety

- Operate the Boiler periodically to ensure that it will operate satisfactory when needed.
- Do not relocate or bypass any of the safety controls in the original Boiler installation.
- The operation of the Boiler must be verified for acceptable operation before and after installation of the add-on appliance by a gas fitter who is recognized by the regulatory authority.
- Do not connect to any chimney or vent serving a gas appliance.

Installation should comply with requirements of CAN/ CSA-B365, and changes to the installation should comply with CSA B139 (for oil-fired Boilers), C22.1 (for electric Boilers), or CAN/CSA B149.2 (for gas-fired Boilers).

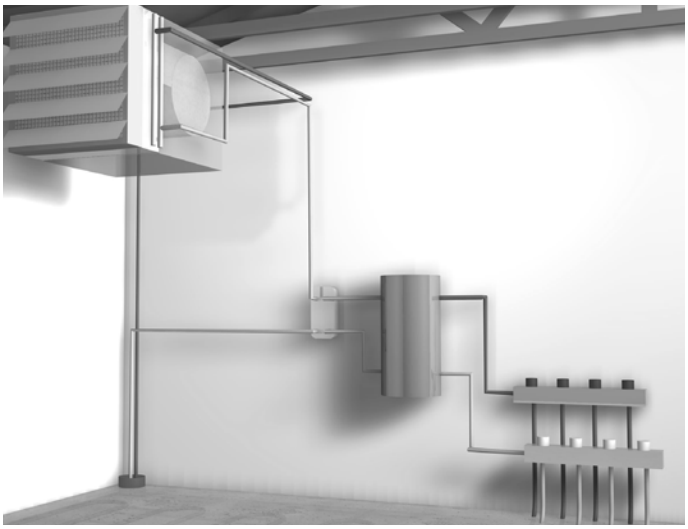

Boiler Diagram

Domestic Hot Water

Flat plate heat exchangers can be used very effectively to pre-heat domestic water. This heat exchanger is typically installed in the cold water line feeding the conventional water heater. The water heater settings remain unchanged. Depending on the furnace operating temperatures, an anti-scald valve may need to be installed after the water heater. In situations with very hard water, you may find a tube & shell style heat exchanger to have lower maintenance requirements than a flat plate style.

Forced Air Furnace (Water-To-Air Exchanger)

The water-to-air heat exchanger is typically mounted in the supply air plenum directly off the forced air furnace cabinet. The entire airflow should be routed through the heat exchanger and it should be mounted below the A/C coil if possible. The heat exchanger should be sized to fit existing ductwork and exceed the heat loss requirements of the building. An over-sized heat exchanger can result in very short on cycles providing uneven heat.

If undersized, it will not produce the necessary BTU's to maintain the building temperature in the coldest weather. Although not ideal, the heat exchanger can also be placed in the cold/return air portion of the ductwork. Some furnaces may have issues with hot return air exceeding the maximum design temperatures of the furnace. This should be investigated prior to installation.

It is important that the warm-air supply-duct system is constructed of metal in accordance with NFPA 90B- 1993, 2-1.1. If the outlet-air temperature of a central furnace exceeds 250° F (121° C) when it is tested in accordance with the requirements for Simultaneous Firing in 56.4.1 and 56.4.2 of the standard. It is also important that the plenum's installed to the furnaces be constructed of metal in accordance with NFPA 90B- 1993, 2-1.3.

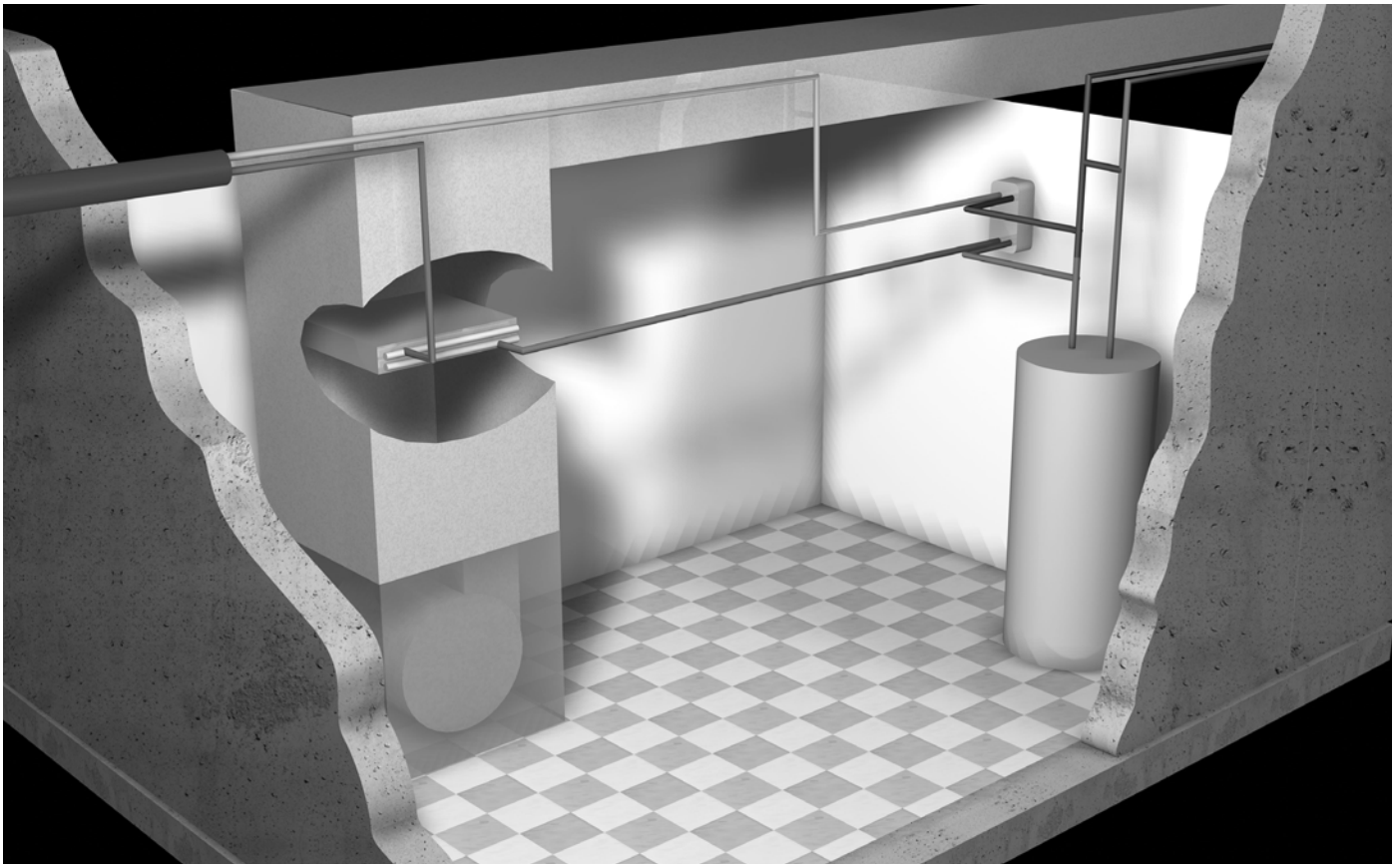

Forced Air & Domestic Water Diagram

B500/1M Wiring Diagram

Power Supply - 220V 1PH 60 HZ
Max Breaker - 40 AMP
Running Load - 33.66 Amps
Max Accessory Load - 6.33 Amps

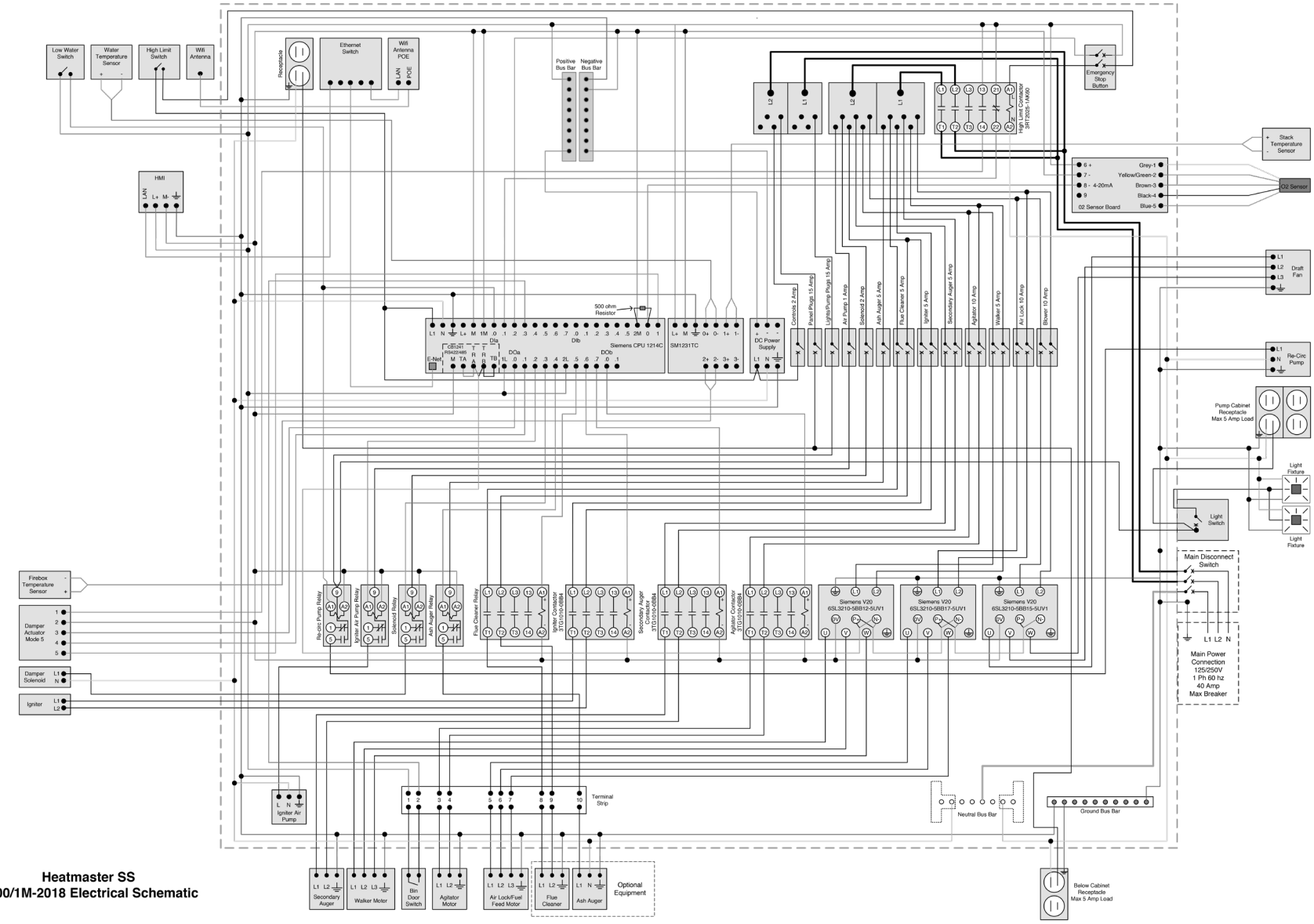

Heatmaster SS
B500/1M-2018 Electrical Schematic

FIELD WIRING DIAGRAM

There are three components that need to be field wired. The cables are factory connected at the control box end, but the agitator and airlock motors will need to be connected to the supplied wiring harness. The Bin door switch will also need to be installed and connected as per the diagram below.

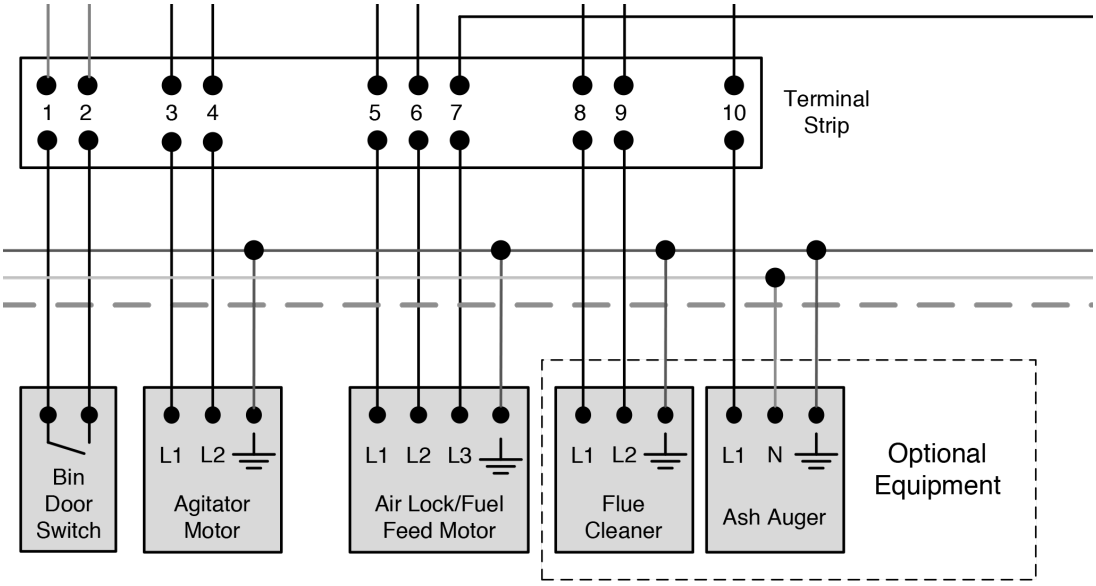

(Referance to wiring diagram on page 16)

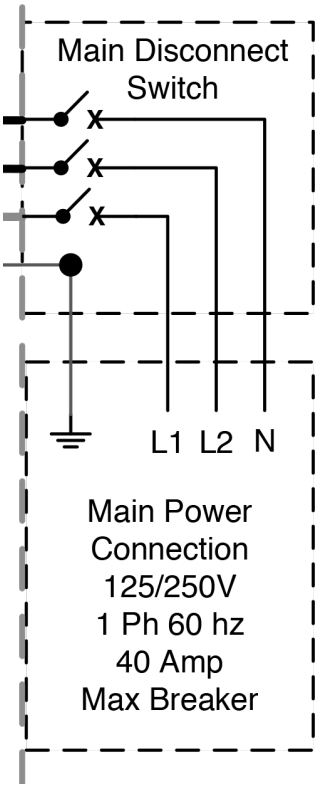

The B500 and B1000 furnaces require a 125/250V, Single Phase, 60Hz Power Supply. A 40 AMP circuit is recommended. The termination should be made in the factory supplied junction box on the side of the control cabinet.

(Reference to wiring diagram on page 16)

WOOD QUALITY

This heater is designed to burn natural wood chips only. Higher efficiencies and lower emissions generally result when burning fuel with less than 25% moisture content. Burning wet wood chips may increase annual usage by 30% or more.

The prohibition against burning these materials does not prohibit the use of fire starters made from paper, cardboard, sawdust, wax and similar substances for the purpose of starting a fire in an affected wood heater.

Burning these materials may result in the release of toxic fumes or render the heater ineffective and cause smoke.

DO NOT BURN:

1. Garbage;
2. Lawn clippings or yard waste;
3. Materials containing rubber, including tires;
4. Materials containing plastic;
5. Waste petroleum products, paints or paint thinners, or asphalt products;
6. Materials containing asbestos;
7. Construction or demolition debris;
8. Railroad ties or pressure-treated wood;
9. Manure or animal remains;
10. Saltwater driftwood or other previously salt water saturated materials;
11. Unseasoned wood; or
12. Paper products, cardboard, plywood, or particleboard.

Storing wood chips

Protecting the fuel from rain and direct contact with the ground will prevent the fuel quality from deteriorating over time. Store your wood chips under an open-ended shelter to avoid rain and snow build-up on the pile. Keeping 3 sides open will allow the sun and wind to season the wood. Storing wood chips in a woodshed or under a tarp in the summer will hinder airflow and allow moisture to wick up from the ground into the fuel.

KEEP ALL FUELS IN A DRY AIR-AIDED STORAGE

WARNING: Risk of fire:

- Do not operate with firebox or ash removal doors open.
- Do not store fuel or other combustible material within marked installation clearances.
- Inspect and clean flues and chimney regularly.
- Remove ashes regularly.
- Do not use chemicals or fluids to start the fire.

CAUTION: Hot Surfaces: Keep children away. Do not touch during operation.

Review the furnace controls, components, and safety devices prior to start up.

CONTROLS AND SAFETY DEVICES

Furnace Control
Your HeatMaster[SS] B Series furnace uses a factory-programmed control to maintain the set water temperature. The control is located opposite the firebox door and offers several user programming options to accommodate a wide variety of installation variables. The control has 8 screens for convenient access to the furnace settings and operation status. Each screen is activated by its corresponding button.

DASHBOARD SCREEN:

This primary run screen displays the status of each component of the furnace.

Run/Stop Button
To shut the furnace down in a non-emergency, press the STOP button in the top left corner of the screen. This will shut the unit down by running through the standard time delay shut down sequence.

Emergency Stop Button
Press the Emergency Stop Button on top of the control cabinet in the event of an emergency. This will shut down the drives to the augers, blower, etc. The power will remain on to the lights, controls, and auxiliary power receptacles.

Manual Mode
Once the furnace has been shut down via the Run/Stop button the user has the option to manually run individual components of the furnace for testing or service. Press the Manual Mode button to activate that feature, then select the component you wish to activate. Note that this mode over-rides all the controls alarm interrupts. Use caution to avoid personal or equipment damage.

Equipment Status
The indicator lights on the right-hand side of the screen indicate the operating mode of the furnace.

Stop mode
If the unit is powered up but not been put into the Run Mode.

Run Mode
If the unit has been started and the control system is active.

Cold Start Mode
If the unit has been started in a low water temperature situation and the water is still below normal operating temperature.

Alarm
If there is an Alarm condition (see the Alarm screen descriptions).

Heat Demand
If the unit is in a heating cycle.

Shut Down Cycle
If the unit has been heating but has either been put into Stop Mode or has reached the water temperature set-point and it shutting down.

The individual component status is displayed on the left side of the screen. If the indicator is lit the component is in operation.

Water Temperature
This displays the current temperature of the water in the furnace. In normal operation, this should be within +/-5 F. of the set temperature range.

Stack Temperature
Displays the exhaust temperature leaving the furnace.

Firebox Temperature
The current temperature at the firebox sensor. This temperature varies continually but should be >1800 F.

O2
Displays the current level of Oxygen in the exhaust leaving the furnace.

WATER TEMPERATURE SCREEN:

Water Temperature Set-point
The temperature the furnace should shut down. The differential is the number of degrees in Fahrenheit the furnace should cool from set-point before the furnace should start up.

Low Temperature Shut Down
The temperature at which the furnace should shut down to preserve heat in the event of a loss of operation.

IGNITION SETTINGS SCREEN:

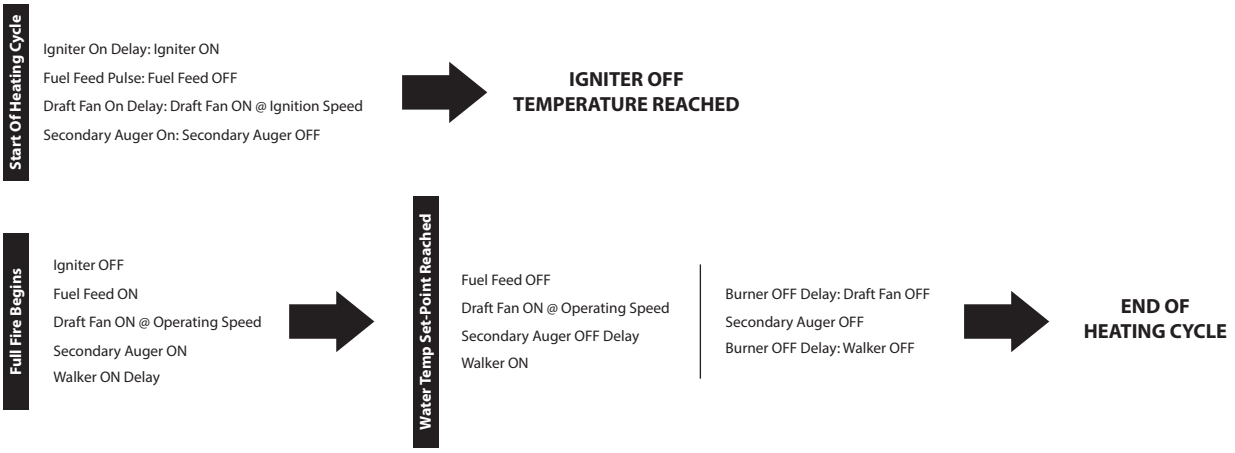

Igniter On Delay
The amount of time the fuel auger will run before the igniter will start.

Ignition Fuel Feed Pulse
The amount of time the fuel auger will run to deliver a sufficient amount of fuel for the igniter to light and reach the Igniter Off Temperature.

Ignition Fan Speed
The speed of the fan motor (%) during the ignition cycle. Certain fuels light better with less than full air during the ignition process.

Igniter Off Temperature
Once the temperature at the firebox sensor reaches this set-point the igniter will turn off. This should be set high enough to ensure the fire is established well enough to transition to full fire.

Draft Fan On Delay
The amount of time from the start of the heating cycle to when the fan should start at Ignition Speed.

Walker On Delay
The amount of time from the start of the full fire to when the walking grate should begin to move the fuel along the grate. This allows time for the fire to be established.

Secondary Auger Off Delay
The amount of time the secondary auger needs to run to empty at the end of a Heating Cycle. This helps prevent the fuel from burning back along the auger in an off cycle.

Burner Off Delay
Fan and walking grate off delay at the end of a burn cycle. This allows the fuel being purged from the secondary auger to be burned before shut down.

Igniter By-pass Temperature
The temperature of the firebox that will by-pass the ignition cycle on startup. This will avoid running the igniter unnecessary if the firebox is still hot enough to ignite the fuel.

Igniter By-pass Fan On Delay
The on delay time of the fan from the start of a cycle that does not require the igniter. This allows time for fuel to be delivered to the burning grate before the fan is turned on. If this time is set too short, the fan will turn on and burn up the fuel remaining on the grate before the fresh fuel is delivered. This can cause a loss of ignition. If this time is too long the furnace will smoke excessively on startup and raw fuel may end up falling off the grate before it is completely burnt.

O2 CONTROL SETTINGS SCREEN:

The B500, B1000 furnace comes equipped with a sensor to measure the oxygen levels in the exhaust of the furnace. If the oxygen levels are too low; poor combustion may result.

O2 Set-point
This is the target minimum oxygen level. O2 levels below the set-point will trigger the secondary combustion air to open, allowing more air to the fire.

Current O2
The current oxygen level at the sensor. (0-25%)

Damper Position
The current target position of the secondary air damper. (0-100%)

MOTOR SPEED SCREEN:

Walker Speed
The set speed for the Walker Motor when the furnace is at full fire.

Fuel Feed Speed
The set speed for the Fuel Feed Motor when the furnace is at full fire.

Draft Fan Speed
The set speed for the Draft Fan Motor when the furnace is at full fire.

TIMER SCREEN:

Ash Auger Settings
The auger removing the ash from the firebox needs to run often enough to keep the ashes from building up to the walking grate. The auger should not run long enough to completely empty the ash auger. The auger should remain full at the outlet end to prevent air from being drawn in through the tube. The amount of time will depend on the ash content of the material being burned. The control is designed to operate the ash auger for a set amount time after a set amount of burning time. For example, after 60 minutes of run time, turn on for 5 minutes.

Flue Cleaner Settings (Optional equipment)
The automatic flue cleaner (if equipped) is designed to keep the furnace heat exchanger clean and running at top efficiency at all times. The setting is similar to the ash auger. After "X" amount of run time, the auger should run for "X" amount of time. This will vary with different fuels. A good starting point is "after 60 minutes of run time, turn on for 5 minutes".

INFO SCREEN:

Furnace Run Time
The amount of burning hours on this unit since commissioning.

Software Version
The installed software version of the PLC control.

ALARMS/ERRORS SCREEN:

This page will display any detected alarms in the operation of the furnace.

Bin Door Open
This switch indicates that the door to the fuel bin has been opened. The furnace has shut down and is currently in "Manual" mode. In order to resume operation, close the bin door and the furnace will resume operation.

Emergency Stop
Indicates that the "Emergency Stop" button on top of the control cabinet has been pressed. The furnace has been shut down and is currently in "Manual" mode. To reset the alarm ensure safe operating conditions, then twist the emergency stop button counter-clockwise until it pops back up. The furnace will then resume operation.

High-Temperature Limit
Indicates that the high-temperature limit switch sensing the furnace water temperature has exceeded its limit. Once the furnace has cooled; this switch will reset automatically.

Low Water Level
This alarm indicates that the water level in the furnace is too low for safe operation. To resume operation, add water until the alarm is reset. Once the furnace reaches its set temperature, top off the water level until the float gauge reads full.

Air Lock Blockage
Indicates that the Air Lock has exceeded its amp draw settings and has exhausted the reverse attempts to clear a blockage. Check for a blockage and free operation of the Air Lock and the secondary auger. Once the Air Lock and auger are operating freely, press the blue "Reset" button next to the "Air Lock Blockage" alarm indicator to resume operation. You may control the Air Lock in "Manual" mode forward or reverse to help clear a blockage.

Low Water Temperature
Indicates that the furnace water temperature has dropped below the "Low-Temperature Shut Down" setting. This may be caused by a loss of fuel flow, excessive heat load, or a mechanical component failure on the furnace. Correct the problem and press the blue "Reset" button next to the "Low Water Temperature" alarm indicator to resume operation. The "Dashboard" screen will display a "Cold Start Mode" indicator until the furnace reaches its set start-up temperature.

B500, B1000 SAFETY COMPONENTS:

High Limit Switch
The high limit cut off switch is used to ensure the furnace does not cause damage via runaway fire. It is a safety switch to cut the power to the furnace combustion components if the water temperature rises above 190° F.

Low Water Cut Off Switch
This switch is mounted in the upper part of the water tank and floats when submerged in water.

Emergency Stop Button
Emergency stop of all motor-controlled equipment. Power will remain on for controls, lighting, and accessory outlets. To reset, twist the button counter-clockwise.

HOW THE B-SERIES BIOMASS FURNACE WORKS

HeatMaster[ss] is proud of its reputation for producing innovative heating methods. Our efficient and clean burning B Series furnaces are continuing that trend.

How It Works

The process begins in the fuel storage bin. An agitator, consisting of 2 arms with long springs, turns just above the floor of the bin and delivers the wood chips to the fuel auger. The fuel auger then drops the chips into the rotating Air Lock.

From the Air Lock, the fuel is dropped into the secondary auger which delivers it up into the fire box where it is dropped onto the walking burn grate. **(See Figure 1)**

On a cold start, the igniter then lights the fuel and the draft fan starts pulling air through the damper and walking grate to supply the fuel with oxygen to burn. The burning fuel is moved along the grate and reduced to ash before being dropped into the ash auger and removed from the furnace. From the firebox, the hot combustion air heats the surrounding water by being drawn down through the first pass of heat exchanger flues and up through the second. From this point, the cooled exhaust air is vented through the draft inducer fan and out the chimney. The heated water is then delivered via the distribution piping to the areas requiring heat. **(See Figure 2)**

Figure 1

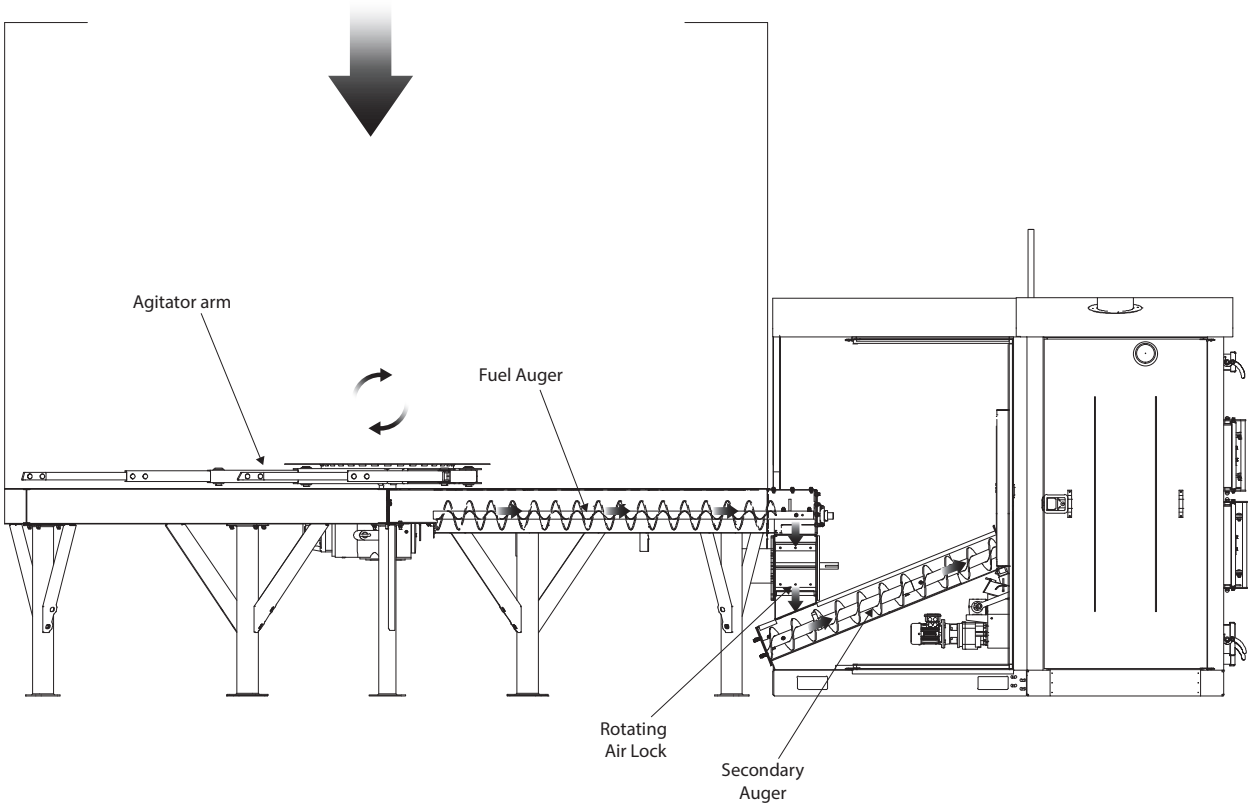

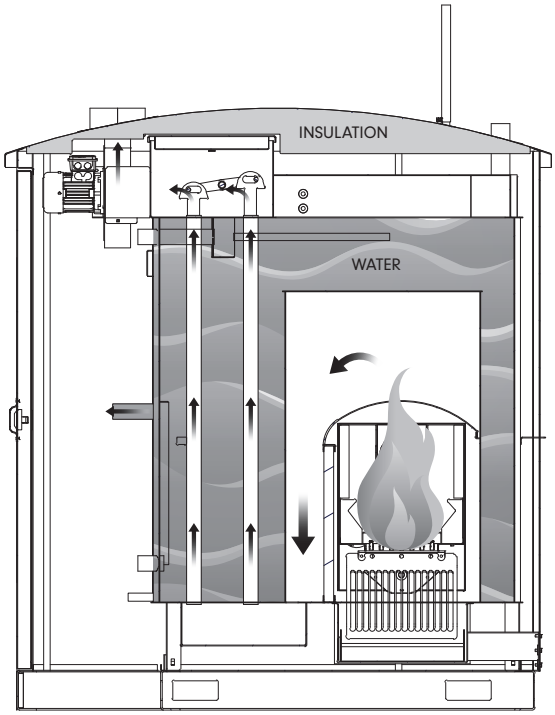

Figure 2

OPERATING THE FURNACE

FILLING THE FURNACE WITH WATER

The most effective way to fill the furnace with water is to do so from a valve installed in the heating lines within the building. Be sure the water is of good quality and check with local codes to confirm proper installation to prevent back-flow. Using this method water can be pushed out to the furnace through the underground piping alternating between the supply and return lines. This will push much of the air in the lines out the vent on the roof of the furnace and simplify air elimination on startup.

- With all the circulating pumps in the "OFF" position, power up the furnace. The "Alarms" page will display on the screen indicating a "Low Water" alarm.
- Fill the furnace with water until the "Low Water" alarm is cleared. Do not fill the unit to the full mark on the rooftop float indicator as this will cause spillage when the water expands as it is heated.
- Start up the system pumps and purge any remaining air from the system piping. Check for, and repair any leaks at this time.
- After the initial fire and the furnace has reached its set temperature, top up the water until the float indicator on the roof shows full.
- Check the water level weekly and add water as necessary. There is evaporation from an open system and adding 6-10 gallons per year is not unusual.

CAUTION: Do not fire the furnace or power on the circulating pumps until the unit is filled with water. Check system water levels and fittings for leaks after startup, and again after 2 days of operation. Take your initial water sample at this time and be sure that it is sent in for testing.

IMPORTANT: To properly maintain your furnace, test your water every year. Water treatment may need to be added or your furnace may need to be drained and flushed and water treatment added. For information on acquiring this product refer to your local dealer.

Hint: A bleeder valve installed at a high point in the building piping can be very helpful in removing air from the system on initial startup. If any part of the system is higher than the furnace; a bleeder valve should be used to make sure all air is removed.

ATTENTION: Your water level will rise as the temperature of the water rises and fall as the water temperature falls. If your water level falls to a low level, first check your water temperature before filling with water again.

LOW TEMPERATURE SHUT DOWN: Your furnace is equipped with a Low Temperature Shut Down feature. Anytime the water temperature is below this temperature setting (factory set at 140 F.) the "Low Temperature" alarm will be activated and the furnace will shut down. In order to start/resume operation press the reset button to the left of the alarm, this will initiate the ignition process. The Dashboard screen will indicate that the furnace is in "Cold Start Mode" until the water temperature has reached the lower differential set point (factory set at 160 F.).

ATTENTION: On the initial startup, the water jacket will reach what is called the dew point. This creates condensation inside the fire box which may pool on the floor. This moisture will normally evaporate within a couple of days and is no cause for concern.

FIRING THE FURNACE

These furnaces have been specifically designed to burn wood chips and as such, are not intended for burning any other fuels such as rubber, material treated with petroleum products, leaves, paper products, cardboard, plastic or garbage. Burning these fuels in your furnace will result in the warranty on the furnace being voided.

BURN WOOD CHIPS ONLY!
(Load carefully or damage may result.)

Assembly Steps

- Prepare the foundation and place the furnace in the desired position.
- Assemble the Bin Floor and align the Fuel Auger with the Air Lock
- Assemble and mount the Fuel Storage Bin to the floor.
- Complete the field wiring to the Bin Door Switch, Agitator Motor, and Air Lock Motor.
- Connect the power supply at the control cabinet junction box.
- Install and pressure test the supply and return piping to the building(s).

Commissioning Steps

- Turn on the Main Power switch on the right-hand side of the control cabinet. The Alarm screen should display "Low Water" and "Low Temperature" alarms.
- Fill the furnace with water until the Low Water alarm is cleared. Do not fill the furnace completely full. Top it off once the water is up to the set operating temperature.
- Power up the pumps supplying the building loop(s) and purge the air.
- Re-Set the Low-Temperature Shut-Down Alarm. This will start the furnace in "Cold Start" mode.
- On the Dashboard screen toggle the mode to **RUN**. The furnace should start and begin the ignition cycle. On a new start-up, you may need to allow the unit to run for a minute or so. Switch the unit to **STOP** Mode, and the switch back to **RUN** mode to allow extra time to fill the empty augers.
- The furnace should automatically ignite and proceed to burn until it reaches the Water Temperature Set-point.
- To optimize the combustion, adjust the fuel feed rate to match the combustion air flow. If the feed rate is too high the exhaust will be smoky and the fuel may not be completely burnt when falling off the Walking Grate. If the feed rate is too low the flame will be small and thin, the oxygen levels in the exhaust will be high, and the heat output will be low.
- Adjust the Walking Grate speed to move the fuel along the grate to the point where the flame is spread out over roughly 2/3 of the grate area. If the speed is too low the flame will all be in the back of the grate and the fuel will pile up quite deep. If the speed is too high the fuel will fall off the grate into the ash area unburned. Try to target a relatively even fuel spread in the back ½ of the grate area diminishing toward the front edge. The fuel should be reduced to complete ash before it reaches the front edge of the grate.
- Monitor the ash levels in the area below the walking grate. In normal operation, the auger should always be full of ash but the ash should never build up to touch the walking grate. Adjust the Ash Auger Timer settings accordingly.
- The Fuel Feed Rate, Walker Speed, Draft Fan Speed and Ignition Settings will need to be adjusted when burning fuel of different size and moisture content.

For detailed instructions on the control settings, see the "Controls and Safety Devices" section of this manual.

B500, B1000 FURNACE COMPONENTS

1. Wifi Mast
2. Chimney
3. Draft Inducer Fan
4. Return Lines
5. Supply Lines
6. Firebox Door
7. Ash Drawers
8. Boiler Control
9. Secondary Auger
10. Walker Drive
11. Ash Auger
12. Emergency Stop Button
13. Power Junction Box
14. Recirculation Pump

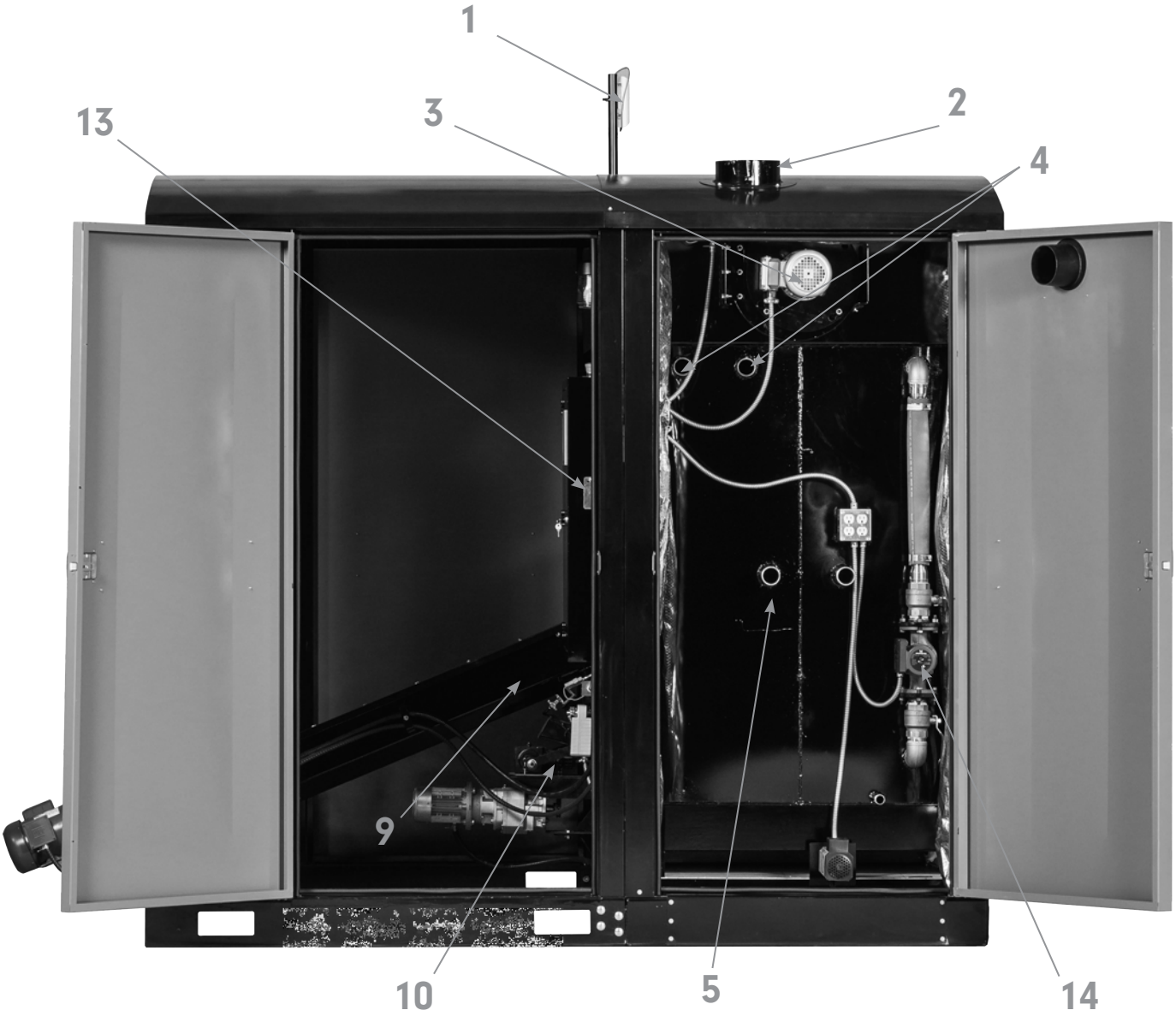


6
7
11


12
8
11

CARE AND MAINTENANCE

To maintain high levels of performance from your furnace, certain maintenance procedures are required periodically.

CAUTION: Always turn off the furnace before removing or servicing any components on this furnace. Serious injury or death may result.

On a daily basis:

- Ensure that all doors are closed and sealing properly. Adjust if necessary.
- Make sure all covers and guards are securely in place.
- Check for ash build-up in the firebox. Adjust the ash auger timer settings if necessary.
- Check water level.
- Clean heat exchange tubes by aggressively pushing and pulling the lever back and forth at least 5 times.
- Check the "Dashboard" settings to confirm the temperatures and Air Lock amp draw are within normal operating limits.
- Check the level of the ash bin. Empty when necessary.
- Take a moment to stop and listen to the operation of the unit. An unusual noise can be a simple indicator of a problem with a mechanical component.
- Check daily for creosote build up until experience shows how often cleaning is necessary.

On a weekly basis:

- Check the lower flue area and remove the fly ash as necessary.
- Inspect chain drives for proper lubrication and tension.
- Inspect gearboxes for any signs of leaks.
- Inspect piping connections for signs of leaks.

On a monthly basis:

- Inspect air inlet damper and solenoid for proper operation.
- Lubricate all chains and bearings.
- Check oil levels in all gearboxes.
- Check the fan motor and wheel for soot build-up.

On a seasonal basis when the furnace is not in use, you will have to:

- Remove all ashes and excess creosote from the firebox, upper and lower flue areas, heat exchanger tubes and chimney.
- Check all gasket seals to make sure they are sealing. To replace, remove the old seal and residues from the door, scuff the surface where the seal is placed with sandpaper and re-apply high temp silicone. Lay fiberglass rope over silicone and let it bond for at least 24 hours before using the furnace again.
- Cover the chimney and crack open the bottom door enough to allow air movement and reduction of condensation within the firebox.
- Make sure your water tank is full and have your water tested and adjusted to manufacturer's specifications. See page 5 for exact specifications.
- Check and adjust the furnace doors if necessary to maintain a good seal. This may be done by adjusting the hinges on each side of the door.

All covers and guards must be in place at all times, except for maintenance or service.

Care for the exterior of your furnace is minimal. The user must wash and remove ash and creosote regularly.

Disposal of Ashes:

Ashes should be placed in a metal container with a tight-fitting lid. The closed container should be placed on a non-combustible floor or on the ground well away from all combustible materials before final disposal. If the ashes are disposed of by burial in soil or otherwise locally dispersed, they should be retained in the closed container until all cinders have thoroughly cooled.

Creosote – Formation, and Need for Removal.

The formation of creosote in a Biomass furnace is a sign of poor combustion caused by an improper air/fuel mixture. If you notice creosote in your firebox or flues, check your air and fuel flow rates and balance them to achieve a hot, clean burn. When wood is burned slowly, it produces tar and other organic vapors, which combine with expelled moisture to form creosote. The creosote vapors condense in the relatively cool chimney flue of a slow-burning fire. As a result, creosote residue accumulates on the flue lining. When ignited, this creosote makes an extremely hot fire. The chimney and chimney connector should be inspected at least twice a month during the heating season to determine if a creosote build-up has occurred. If creosote has accumulated it should be removed to reduce the risk of a chimney fire.

CAUTION: Make certain that all electrical power to the furnace and components is shut off. It can be washed using water and a mild nonabrasive cleaner suitable for painted surfaces.

ATTENTION: Avoid direct water pressure to electrical components and connections.

Troubleshooting

TROUBLESHOOTING POOR COMBUSTION AND LOW HEAT OUTPUT:

Symptoms:

- Cannot achieve the set temperature.
- Excessive smoke for extended periods of time.
- No exhaust coming from the chimney.
- Poor general functionality.

Follow the steps below to inspect and test the components that may influence these factors.

CAUTION: Always shut the furnace down and allow it to cool sufficiently before inspecting or servicing.

Draft Fan:

- Place the furnace in Manual Mode. Turn on the Draft Fan.
- Confirm the fan motor is turning by checking the fan motor. The motor cooling fan is visible with the side cabinet door open and it should be rotating when the Draft Fan is turned on.
- If the motor is not turning check the breaker for the fan motor. If this breaker has tripped check the Draft Fan for blockage and build-up, and clean if necessary. Reset the breaker and check for motor rotation. If the motor will not turn it may need to be replaced.

Solenoid & Damper:

- Inspect the damper and solenoid. The solenoid should by fully opening the damper when the Draft Fan is on and closing the damper when it is turned off.
- If the solenoid is not opening check the breaker. Reset if it has tripped and check again for proper operation. If the damper remains closed the solenoid may need to be replaced.
- Test for airflow by covering the damper opening with a piece of paper while the draft fan is on. If the paper is drawn against the opening this confirms the fan is drawing air.

Chimney & Fan Wheel:

- With the furnace off, check the chimney for blockage and the fan for soot build-up. They should both be clean for optimum airflow.

Lower Flue Area:

- With the furnace off, check the lower flue area for ash build-up that may be restricting airflow. Clean as necessary.

Walking Grate:

- With the furnace off, check the walking grate for blockage. Clean the grate and make sure the gaps between the walking fingers are clear to allow good airflow.
- Remove one of the walker fingers by lifting the front and rear of the finger evenly. Inspect the chamber below to ensure that it is free from blockage. The drag auger in the chamber should be keeping that area clear. Reinstall the finger.
- Test the walking grate by placing the furnace in Manual Mode and turning on the Walker. The fingers should be sliding freely while rising and falling slightly above and below the fixed grate as they move forward and backwards.
- If the walking grate is not moving, check the motor, gearbox, and chain drive for the walker in the service area of the furnace. If there does not appear to be a problem there check the Walker Control for power. The indicator light should be on when the furnace is calling for heat, or the furnace is in Manual Mode and the Walker is turned on.
- If these inspections do not lead to a solution please contact your dealer for assistance.

Upper Flue Area:

- Inspect the upper flue area of the furnace and heat exchange tubes for blockage.
- Is there wet creosote build-up?
- Do the spirals in the heat exchange tubes have full movement up and down?
- Clean the area as necessary.

Air Lock/Secondary Auger:

CAUTION: The Air Lock, Augers, Chains & Sprockets are dangerous and can cause serious personal injury or death. ALWAYS turn off the main furnace power before servicing.

- With the furnace off check the Air Lock for blockage. Remove any blockage if necessary. In Manual Mode, you may momentarily use the Air Lock Reverse button to help loosen a jammed piece.
- With the furnace in Manual Mode, turn on the Air Lock forward. Visually inspect the Air Lock from the top to confirm that it is turning. If not check the Air Lock breaker and reset if necessary.
- If the Air Lock is clear and turns, or tries to turn, visually inspect the secondary auger. To do so, open the firebox door and check the auger coming through the back wall above the walking grate. When the Air Lock is on, this auger should be turning. If the Air Lock turns, but the auger does not check the chain drive at the bottom end of the auger for damage and repair if necessary. If the chain is okay you may need to remove the top cover of the secondary auger and check for damage or blockage to the auger.
- If the breaker is on, there is no apparent blockage, and the Air Lock will not turn, there may be a problem with the chain coupler, power supply, motor, or gearbox. Consult your dealer for assistance.

Fuel Feed Auger:

- With the furnace on and calling for heat, the fuel auger should be pulling fuel from the bin and dropping it into the Air Lock. If this auger is turning but there is no fuel being delivered, then the bin may be empty or the agitator may not be turning.
- If the Fuel Feed auger is not turning, check the Fuel Feed Motor breaker and reset if necessary.
- If the breaker is set and the auger is not turning, check the Fuel Feed Motor control for power. The power light should be on when the furnace is calling for heat. If not, there may be a problem with the control. Consult your dealer for assistance.
- If the power light is on, check the speed setting on the control. It should be set between 20-50%. If that is so, check the chain drive between the motor and the auger shaft for damage. Repair if necessary. If the control has power, the chain drive is fine, and the auger does not turn, there may be a problem with the electric motor or gearbox. Consult your dealer for assistance.

Agitator:

- With the furnace on and calling for heat, the agitator should be turning within the bin and delivering fuel to the Fuel Feed Auger.
- If fuel is not being fed to the auger, visually inspect the agitator if possible by looking into the bin. If this is not possible, visually inspect the agitator motor and gearbox to see if it is turning.
- If the motor is not turning, check the agitator motor breaker and reset if necessary.
- If the breaker is set, check the agitator motor control. The power light should be on when the furnace is calling for heat. If not there may be a problem with the power supply or control. Consult your dealer for assistance.
- If the power light is on and the motor does not turn, there may be a problem with the motor. Consult your dealer for assistance.

Secondary Air Damper:

- The secondary air damper is designed to open when the oxygen is too low in the firebox for good combustion. If the oxygen is sufficient the damper remains closed even when the furnace is calling for heat. The target position of the damper can be viewed on the O2 Control page of the control.
- If the damper position varies from the target position, check the damper itself for free rotation. Put the furnace in Manual Mode and turn on the Damper Actuator. It should rotate and hold it in the fully open position. If the damper is turned off it should rotate to the fully closed position.

- If the damper does not fully open or close, remove the actuator to inspect for restrictions. Do so by loosening the mounting bolts for the damper and removing the damper from the bracket and damper plate. Inspect the plate, the mating surface on the furnace, and the damper shaft for anything that may restrict rotation and correct if necessary. Reinstall the damper and test again.
- If the damper actuator still will not operate correctly there may be a problem with the power supply or the actuator may need to be replaced. Consult your dealer for assistance.

More than likely, if there is a problem with the furnace burn or airflow, you will find it by checking these things.

Symptom:

The furnace water temperature has reached its target, but the water temperature in the distribution supply lines is cool.

1. Check the operation of the furnace recirculation pump. Confirm that the pump has power and that all the valves are open to allow it to flow. Correct any issues and replace the recirculation pump if it is faulty.
2. Check the distribution pumps for flow.

- Check to ensure all pumps in the system are running and none are pumping the wrong way.
- Check filter cartridge for flow blockage (if installed).
- Check for air in the distribution system and bleed it off where necessary.
- Check for closed valves blocking water flow.
- Check for closed/faulty zone valves.

3. If no obvious flow issues arise from the above system checks, turn off pumps on each line, and close ball valves on the return lines. Remove a return line from a distribution circuit and turn the pump on again. Run the return water into a 5 gallon bucket and time how long it takes to fill it up. Use this information to calculate the flow rate. Do this for each distribution circuit being fed from the furnace to confirm adequate flow. If the problem persists have your dealer inspect the system for possible flow issues or air locks.

If the furnace water and the building supply lines are hot but buildings do not have heat:

1. Check to ensure all pumps in the system are running.
2. Check filter cartridge for flow blockage (if installed).
3. Check for air in the system and bleed if necessary.
4. Check for closed valves to ensure water flow.
5. Check the temperature of the water exiting the furnace, entering the building being heated and before and after each heat exchanger. Large temperature drops signal large consumption of the BTU's produced by the furnace.

If the furnace overheats:

1. Close all air inlets and doors on the furnace.
2. Draw as much heat as possible from the system by turning thermostats up and opening windows until furnace cools down.
3. Check that all doors are closing properly and that the door gasket is completely sealing.
4. Check that the damper plate is opening and closing properly. It should be completely closed when the furnace temperature is over 180° F
5. Check water level.
6. Check to ensure all pumps in the system are running.

If there is a runaway or chimney fire:

1. Make sure the firebox and ash pan doors are tightly closed.
2. Close all combustion air inlets on the furnace.

If the furnace has shut down:

1. Check to ensure that the unit has power.
2. Check to ensure the furnace On/Off switch is in the On position.
3. Check the water temperature (furnace has a high temperature cut off of 190° F and turns on again at 140° F).
4. Check control for errors that may have shut the furnace down.
5. If all checks have not corrected the problem, have a technician check the control panel.

If there is a power failure:

1. This furnace will not operate without power.
   Open all flow-check and zone valves in the system. Depending on the system design, this may allow convective circulation.
   NOTE: This does not apply to gravity systems, as they have no flow-check valves and will continue to operate normally without electricity.
2. It is important to remember that the heating systems cannot dispose of a great deal of heat without the circulator(s) running.
   DO NOT LOAD SOLID FUEL INTO THE FURNACE!
3. When the power has returned, reset all flow-check and zone valves and resume normal operation of the system.

If there is smoke leaking out of the door

1. Check to ensure the door is sealing properly. If the seal is worn out it will have to be replaced.
2. The door may need to be adjusted. To do this, loosen the door latch bearings and nuts on the door hinge and set the door so it seals tightly against the door jamb. Re-tighten once the door is in place.

You are having to fill the furnace with water more than once a week or more than a few gallons of water per week and there is no obvious explanation.

1. Check the temperature settings and adjust if necessary. If water temperature reaches levels over 200 degrees Fahrenheit the water will steam and water loss will occur.
2. Check the perimeter of the furnace for water puddles collecting or dripping from the furnace.
3. Check all plumbing in the system to ensure there are no leaks.
4. If these checks have not provided an answer call your dealer.

ELECTRICAL TROUBLESHOOTING

Electrical troubleshooting should always be done by a qualified technician. Consult your dealer for assistance.

HeatMaster™

Tough on Winter, Easy on You

HeatMaster℠ carries a full line of high-quality parts for your furnace including pumps, fittings and heat exchangers. For more information on our parts or to arrange product installation please contact your local HeatMaster℠ dealer.

HeatMaster℠
Box 158
Winkler, Manitoba, Canada
R6W 4A5
Phone: (204) 325-9792
Fax: (204) 325-9803
Toll Free: 1-877-325-9792
Email: info@heatmasterss.com

heatmasterss.com